JT1066 TRIPOD TURNSTILE DIMENSION

JAVIN

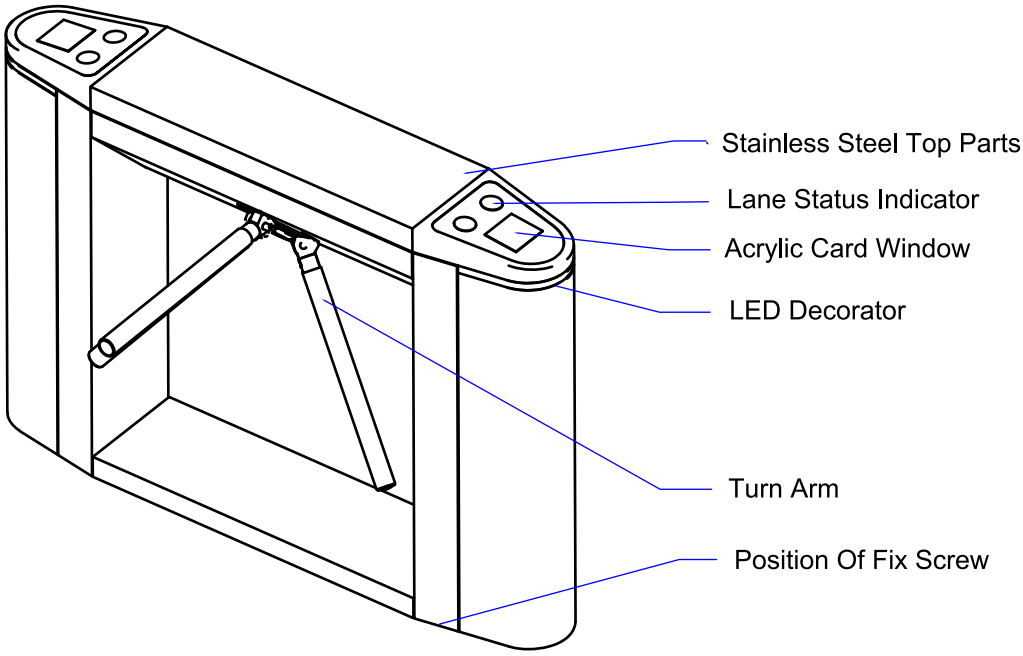

GENERAL DESCRIPTION

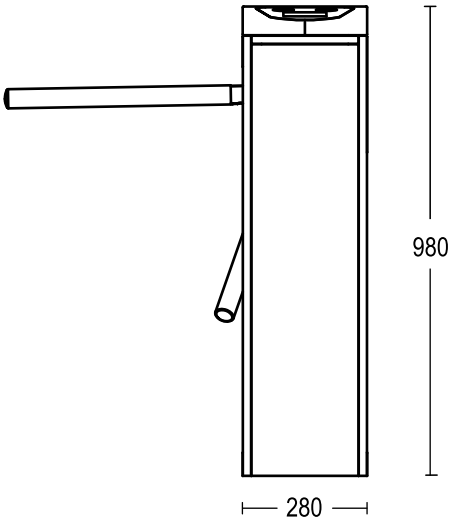

FRONT VIEW

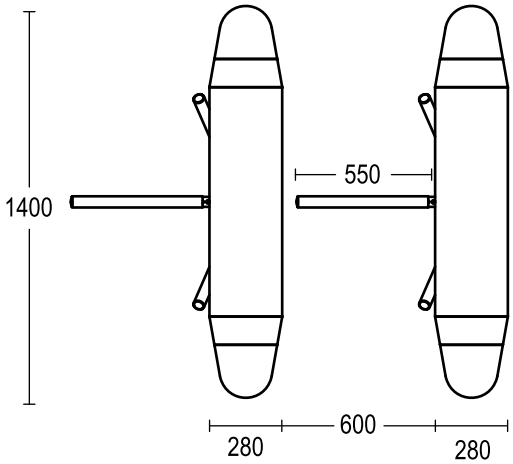

TOP VIEW

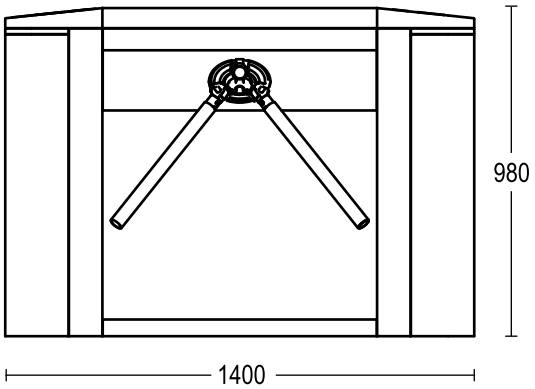

SIDE VIEW