JS3018 SWING GATE DIMENSION

JAVIN

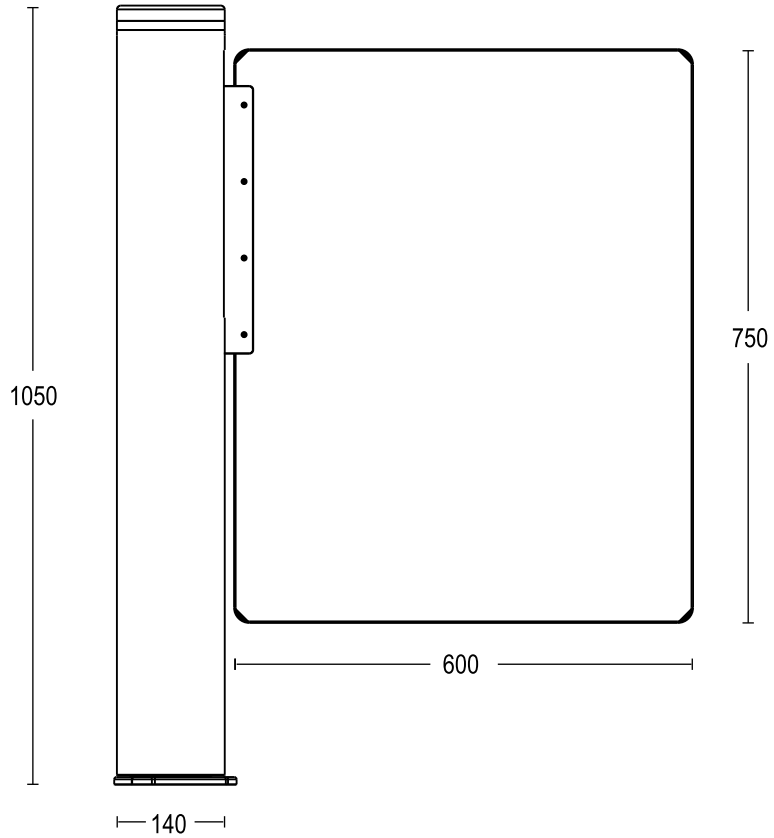

FRONT VIEW

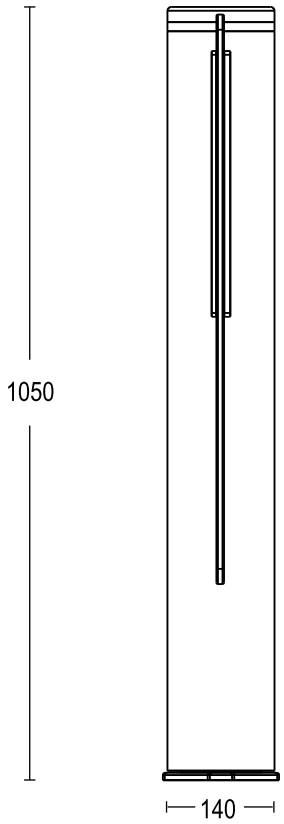

SIDE VIEW