JP8088 SPEED GATE DIMENSION

JAVIN

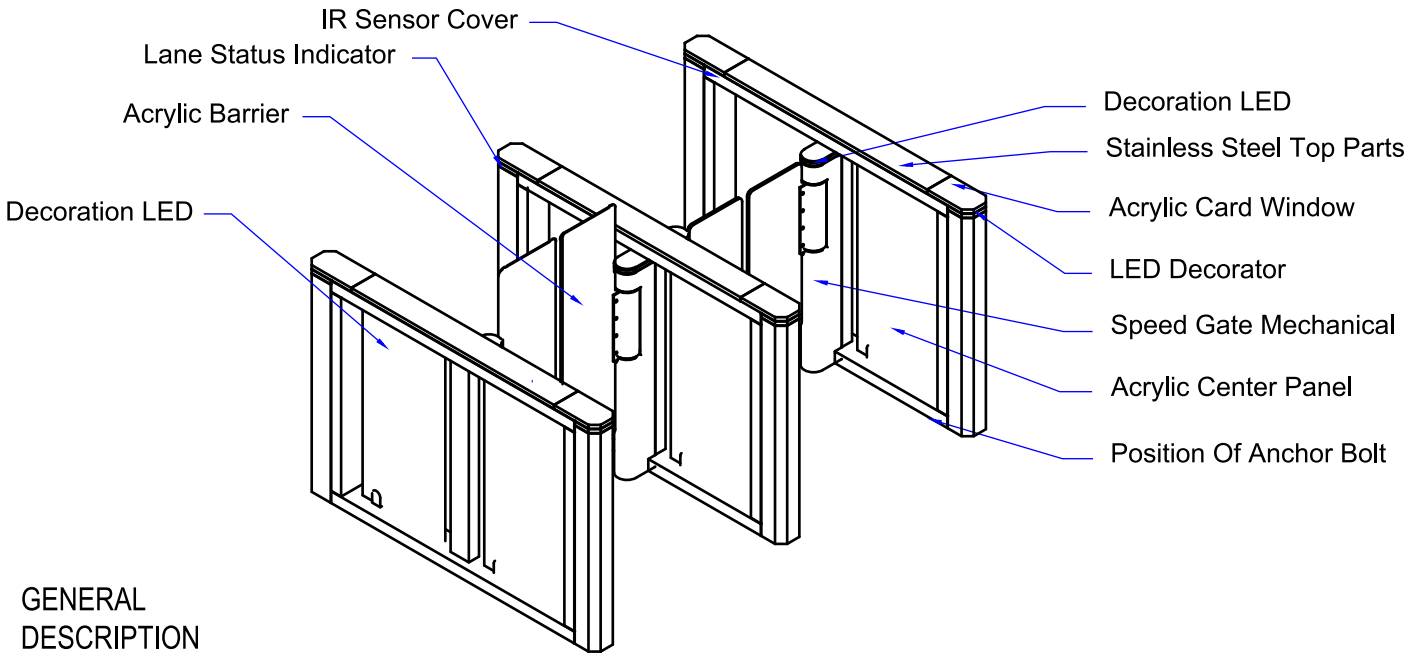

GENERAL DESCRIPTION

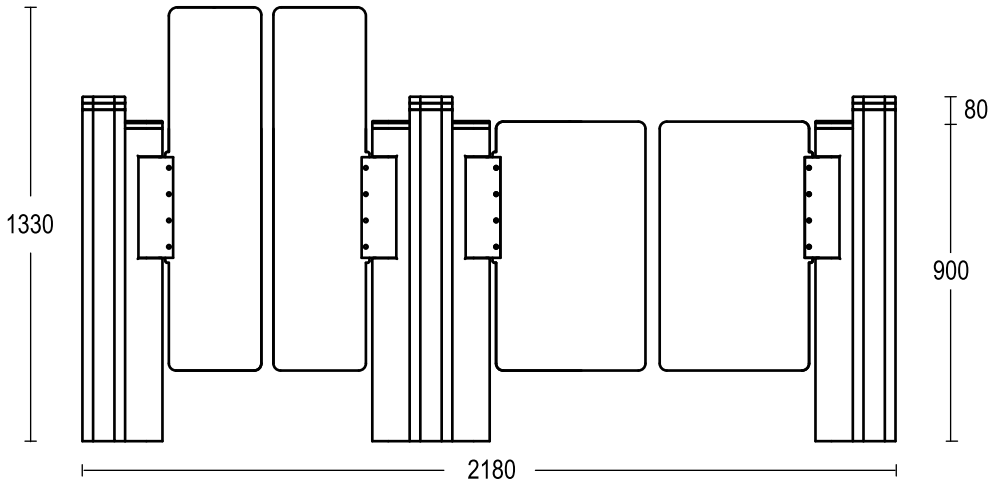

FRONT VIEW

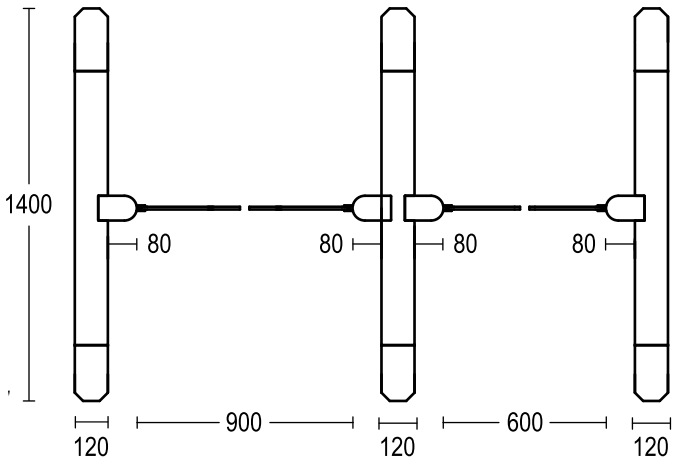

TOP VIEW

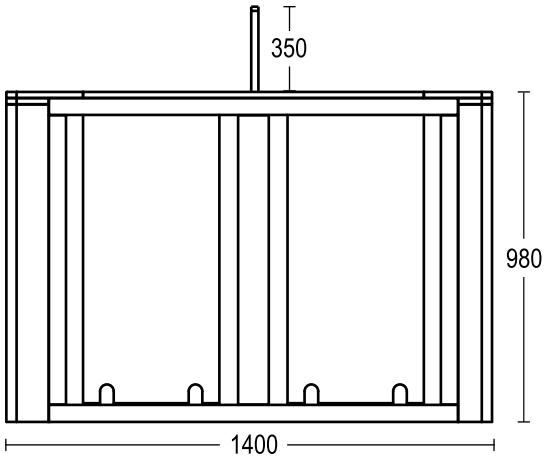

SIDE VIEW