# JP8080 SPEED GATE DIMENSION

JAVIN

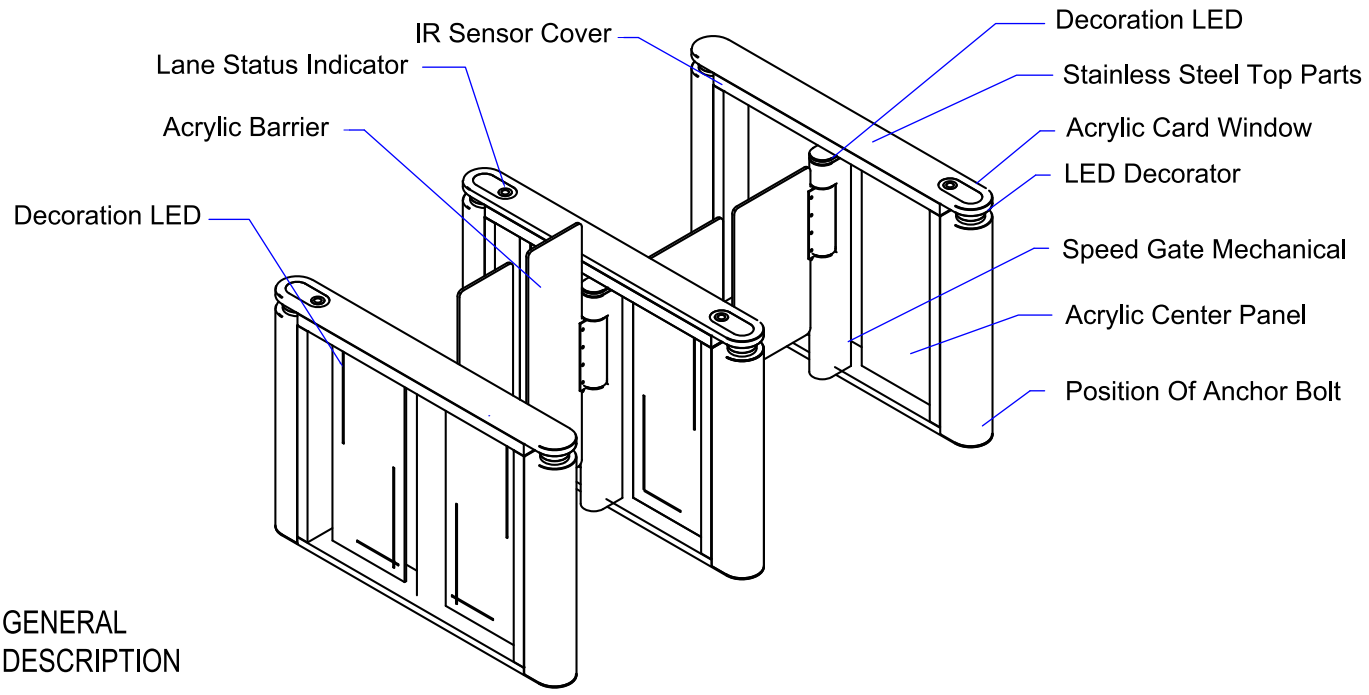


GENERAL DESCRIPTION

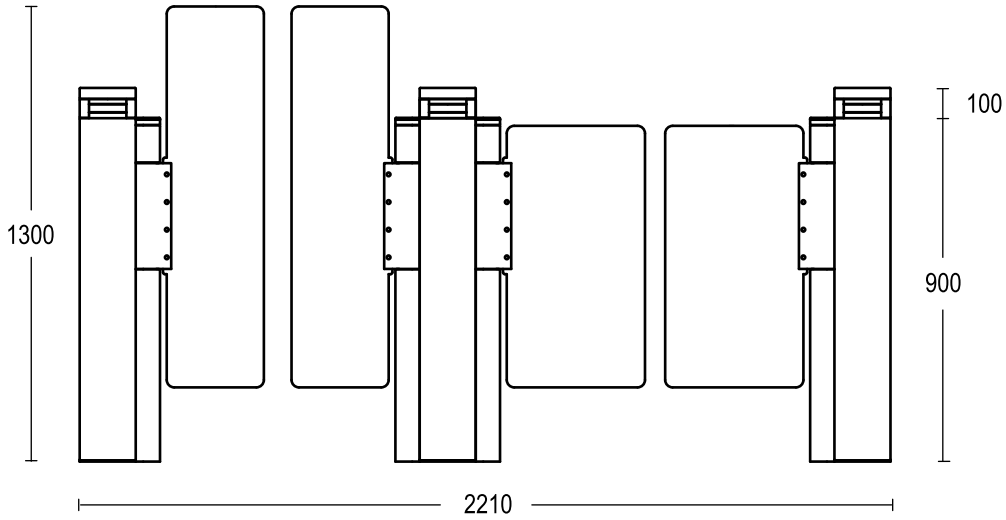


FRONT VIEW

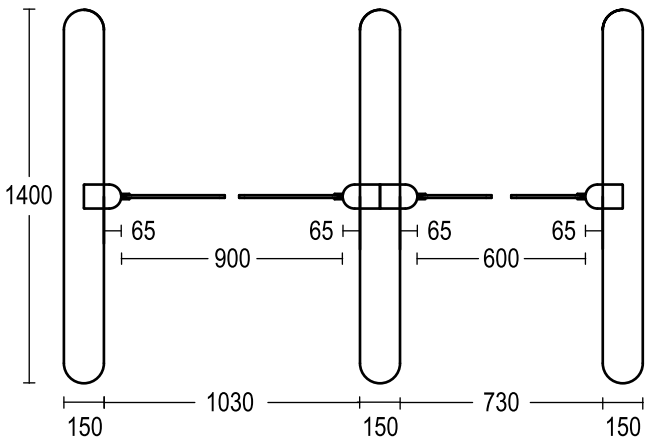


TOP VIEW

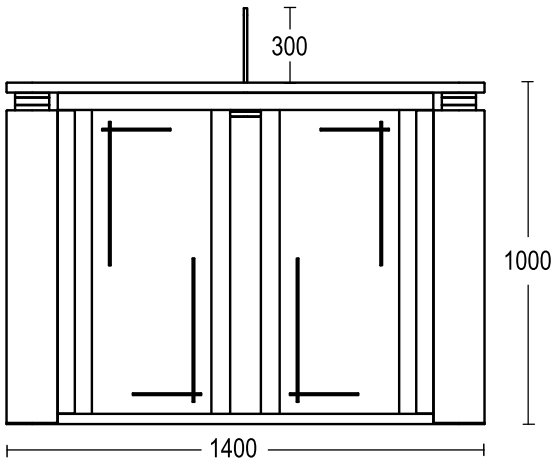


SIDE VIEW