JP8050 SPEED GATE DIMENSION

JAVIN

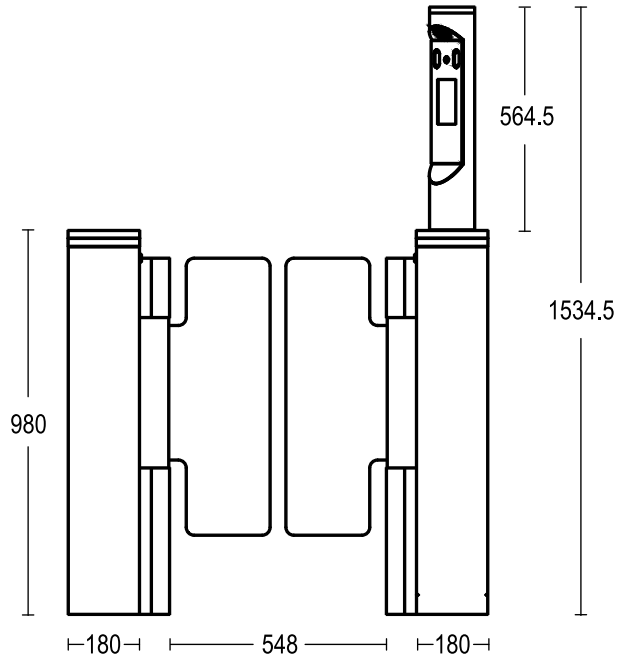

FRONT VIEW

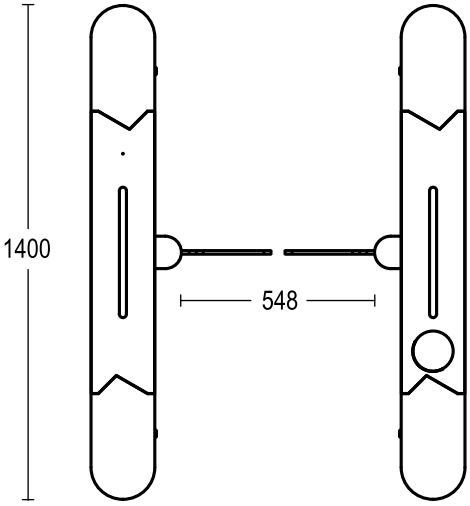

TOP VIEW

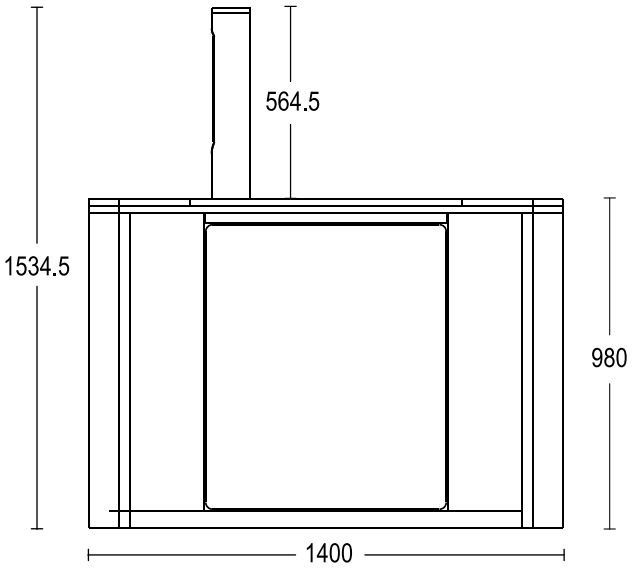

SIDE VIEW