JH6081 TRIPOD TURNSTILE DIMENSION

JAVIN

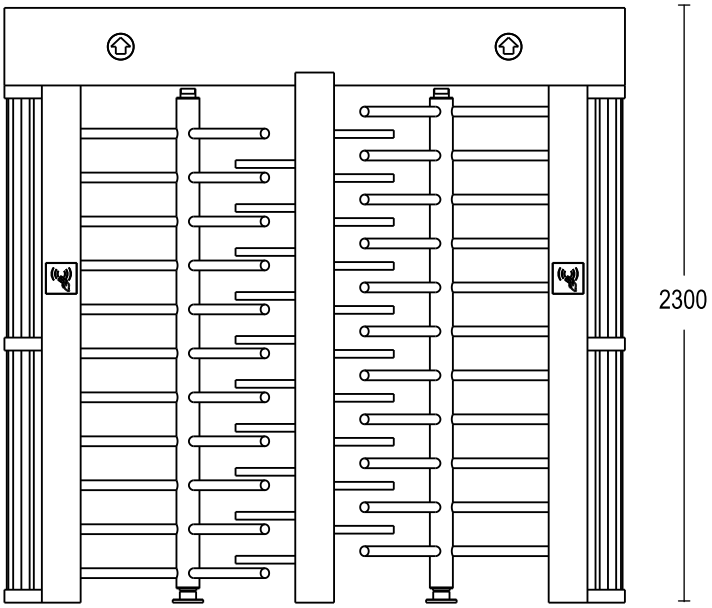

FRONT VIEW

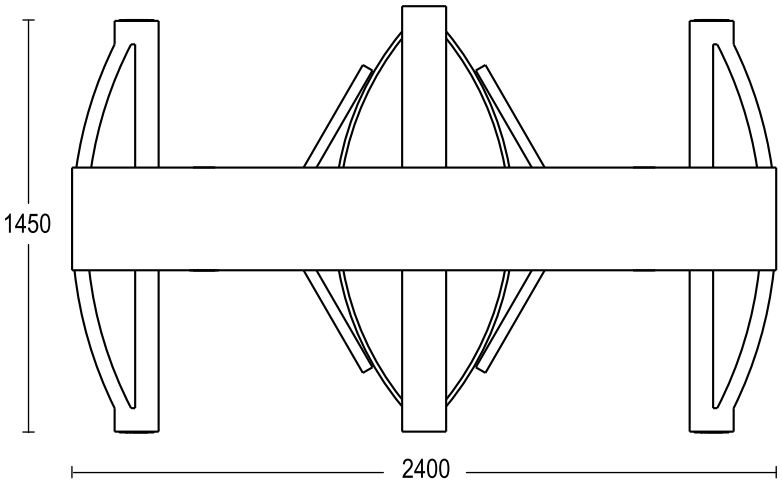

TOP VIEW

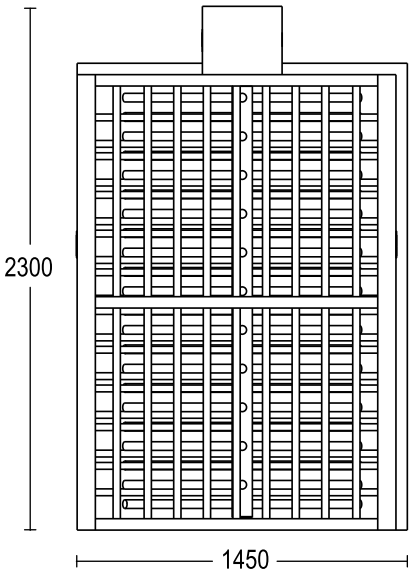

SIDE VIEW